Data sheet

valid from: 3/25/26

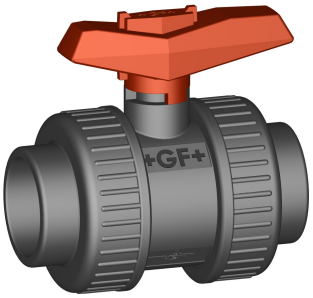

Ball valve type 375 PVC-U
With solvent cement sockets metric

Model:

- True double union safe block ball valve
- Ball seat PTFE
- Handle includes integrated tool for ball seat adjustment
- Very compact dimensions
- z-dimension, valve end and union nut are not compatible with type 546

Range of use:

- Basic industrial applications without automation

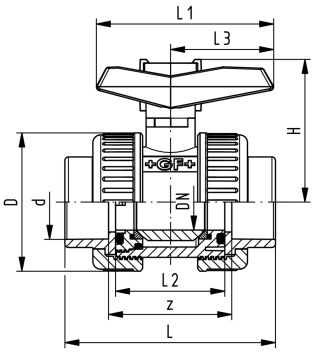

d (mm)	DN (mm)	Size (inch)	PN (bar)	kv-value (Δp=1 bar) (l/min)	EPDM Code	SP	Weight (kg)	FKM Code	SP	Weight (kg)
75	65	2 ½	10	5000	**161 375 508**	1	2.191	**161 375 518**	1	2.191
90	80	3	10	7000	**161 375 509**	1	3.303	**161 375 519**	1	3.303
110	100	4	10	11000	**161 375 510**	1	5.954	**161 375 520**	1	5.954

d (mm)	D (mm)	H (mm)	L (mm)	L1 (mm)	L2 (mm)	L3 (mm)	z (mm)
75	145	129	206	179	110	103	118
90	168	143	242	209	128	120	140
110	210	169	282	250	150	141	160

The technical data are not binding. They neither constitute expressly warranted characteristics nor guaranteed properties nor a guaranteed durability. They are subject to modification. Our General Terms of Sale apply.

Georg Fischer Piping Systems Ltd, Postfach, CH-8201 Schaffhausen/SwitzerlandPhone +41 -(0)52-631 1111e-mail: info.ps@georgfischer.comInternet: http://www.gfps.com